SOLAR-POWERED DC-DC CONVERTER: A CLOSED-LOOP SOLUTION FOR SUSTAINABLE MOBILE CHARGING

19EEE381 – OPEN LAB

Report

Submitted by

CB.EN.U4EEE22023	**M AMRITHA MALA**
CB.EN.U4EEE22027	**NIVETHITHA R**
CB.EN.U4EE22030	**PAVITHRA A**
CB.EN.U4EEE22069	**SAHITYA R**

DEPARTMENT OF ELECTRICAL AND ELECTRONICS ENGINEERING
AMRITA SCHOOL OF ENGINEERING,
AMRITA VISHWA VIDYAPEETHAM,
COIMBATORE - 641112

2022-2026

Amrita School of Engineering

Department of Electrical and Electronics Engineering

Program Educational Objectives (PEOs)

PEO1: Graduate can demonstrate electrical and electronics engineering problem solving skill along with proficiency in communication and professional excellence in project management and execution.

PEO2: Graduate can be employable in engineering services including ICT enabled sectors and also motivated for entrepreneurship.

PEO3: Graduate will be competent for higher studies in world class universities and research in industrial organizations.

PEO4: Graduate will manifest social commitment, environmental awareness and moral and ethical values in professional and other discourses.

Program Specific Outcomes (PSOs)

PSO1: Build and manage electro dynamic systems using Knowledge on electrical technology and semiconductor devices for allied services.

PSO2: Use computational tools and network dynamics for design, analysis and control of power systems integrated with renewable energy and Electric Vehicle.

PSO3: Leverage digital technologies employing state-of- the art control techniques and embedded controllers for industrial applications.

AMRITA VISHWA VIDYAPEETHAM
DEEMED TO BE UNIVERSITY

BONAFIDE CERTIFICATE

This is to certify that the open lab project report entitled **"Solar-Powered DC-DC Converter: A Closed-Loop Solution for Sustainable Mobile Charging"**

submitted by

Roll Nos.	Student Names
CB.EN.U4EEE22023	**M AMRITHA MALA**
CB.EN.U4EEE22027	**NIVETHITHA R**
CB.EN.U4EE22030	**PAVITHRA A**
CB.EN.U4EEE22069	**SAHITYA R**

is in partial fulfillment of the requirements for the award of the Degree of Bachelor of Technology in "Electrical and Electronics Engineering" is a bonafide record of the work carried out at Amrita School of Engineering, Coimbatore.

Internal Examiner External Examiner

CONTENTS

Sl. No.	List of Contents	Page No.
1.	ABSTRACT	5
2.	INTRODUCTION	6
3.	PROBLEM STATEMENT	7
4.	METHODOLOGY	8
5.	BLOCK DIAGRAM	9
6.	MATLAB Simulation	10
7.	CODE	11
8.	HARDWARE SETUP	12
9.	RESULT	13
10.	CONCLUSION & FUTURE WORK	14
11.	REFERENCES	15

ABSTRACT

Solar-Powered Buck Converter for USB Phone Charging. This project presents the design and implementation of a solar-powered buck converter to regulate 12V from a solar panel down to 5V for USB phone charging. The system employs an Arduino-based closed-loop PI controller to dynamically adjust the PWM duty cycle of a MOSFET-based switching circuit, ensuring a stable 5V output regardless of fluctuations in solar input.

A gate driver is used to properly switch the IRFZ44N MOSFET, while a voltage divider circuit (30kΩ & 10kΩ) provides feedback to the Arduino (A0 pin). The control algorithm continuously monitors the output voltage and adjusts the PWM signal to maintain precise regulation. A USB Type-A female port is integrated to facilitate direct phone charging, with a 470Ω resistor between D+ and D- for fast charging compatibility.

Testing includes both open-loop and closed-loop configurations, demonstrating successful output stabilization at 5V under varying input conditions. The system is validated through multimeter measurements, serial monitor debugging, and load testing. The proposed design offers a cost-effective, efficient, and sustainable solution for charging mobile devices using renewable energy sources.

INTRODUCTION

With the growing reliance on mobile devices, there is a need for sustainable and efficient charging solutions, especially in off-grid or remote locations. Solar energy presents a viable alternative to conventional power sources, but fluctuations in sunlight cause variations in the output voltage of solar panels, making direct phone charging unreliable. To address this issue, this project focuses on designing and implementing a solar-powered buck converter that steps down 12V from a solar panel to a stable 5V suitable for USB phone charging.

The system integrates an Arduino-based closed-loop PI controller that dynamically adjusts the PWM duty cycle of a MOSFET-based switching circuit to maintain precise voltage regulation. A gate driver ensures proper MOSFET switching, while a voltage divider circuit (30kΩ & 10kΩ) provides real-time feedback to the Arduino, allowing continuous monitoring and adjustment of the output voltage. To enhance compatibility with fast-charging devices, a USB Type-A female port is integrated with a 470Ω resistor between the D+ and D- lines.

The project involves testing both open-loop and closed-loop configurations to evaluate the system's stability and efficiency. The closed-loop control mechanism ensures that the output remains consistently at 5V, even under varying solar input conditions. The system is validated using multimeter measurements, serial monitor debugging, and load testing, demonstrating its effectiveness.

This design offers a cost-effective and sustainable solution for mobile charging, making it ideal for renewable energy applications. By leveraging a closed-loop control approach, the system efficiently regulates power and compensates for solar input fluctuations, ensuring reliable USB phone charging. The proposed solution contributes to reducing dependence on conventional electricity, promoting the adoption of solar energy for small-scale, everyday applications.

PROBLEM STATEMENT

How can we ensure a stable and efficient 5V USB charging solution using solar power, despite unpredictable variations in sunlight and panel output?

To ensure a stable and efficient 5V USB charging solution using solar power, a buck converter with a closed-loop PI controller is implemented. The system dynamically adjusts the PWM duty cycle of a MOSFET-based switching circuit to regulate the voltage despite fluctuations in solar input. A gate driver ensures proper MOSFET switching, while a voltage divider provides real-time feedback to the Arduino for precise control. Testing in both open-loop and closed-loop configurations confirms stable 5V output, making the design a reliable, cost-effective, and sustainable solution for USB phone charging using renewable energy.

METHODOLOGY

- The system is designed to harness solar energy by converting a variable 12V input from a solar panel into a reliable 5V output suitable for USB charging.
- Key components include a buck converter that lowers the voltage, an Arduino microcontroller running a closed-loop PI control algorithm, and an IRFZ44N MOSFET paired with a gate driver for rapid, efficient switching.
- A voltage divider using 30kΩ and 10kΩ resistors continuously monitors the output voltage and provides real-time feedback to the Arduino.
- The solar panel supplies the initial power, with voltage levels fluctuating according to sunlight intensity.
- The buck converter steps down the variable voltage while the Arduino adjusts the process based on feedback from the voltage divider.
- The PI control algorithm on the Arduino fine-tunes the PWM duty cycle to maintain a steady 5V output.
- The IRFZ44N MOSFET and its gate driver ensure quick and efficient switching, thereby reducing power losses.
- A USB Type-A female port, equipped with a 470Ω resistor between the D+ and D- lines, supports fast charging protocols.
- The circuit is assembled on a printed circuit board (PCB) with a layout designed to minimize noise and losses.
- Arduino code was developed and simulated to verify the performance of the PI controller prior to hardware testing.
- Initial testing in an open-loop configuration established baseline performance, followed by closed-loop testing that monitored voltage stability via a multimeter and serial output.
- Calibration involved fine-tuning the PI controller settings to achieve optimal performance under varying solar input conditions.
- Tests conducted under different lighting scenarios confirmed that the system consistently maintained a stable 5V output despite fluctuations in solar energy.

BLOCK DIAGRAM

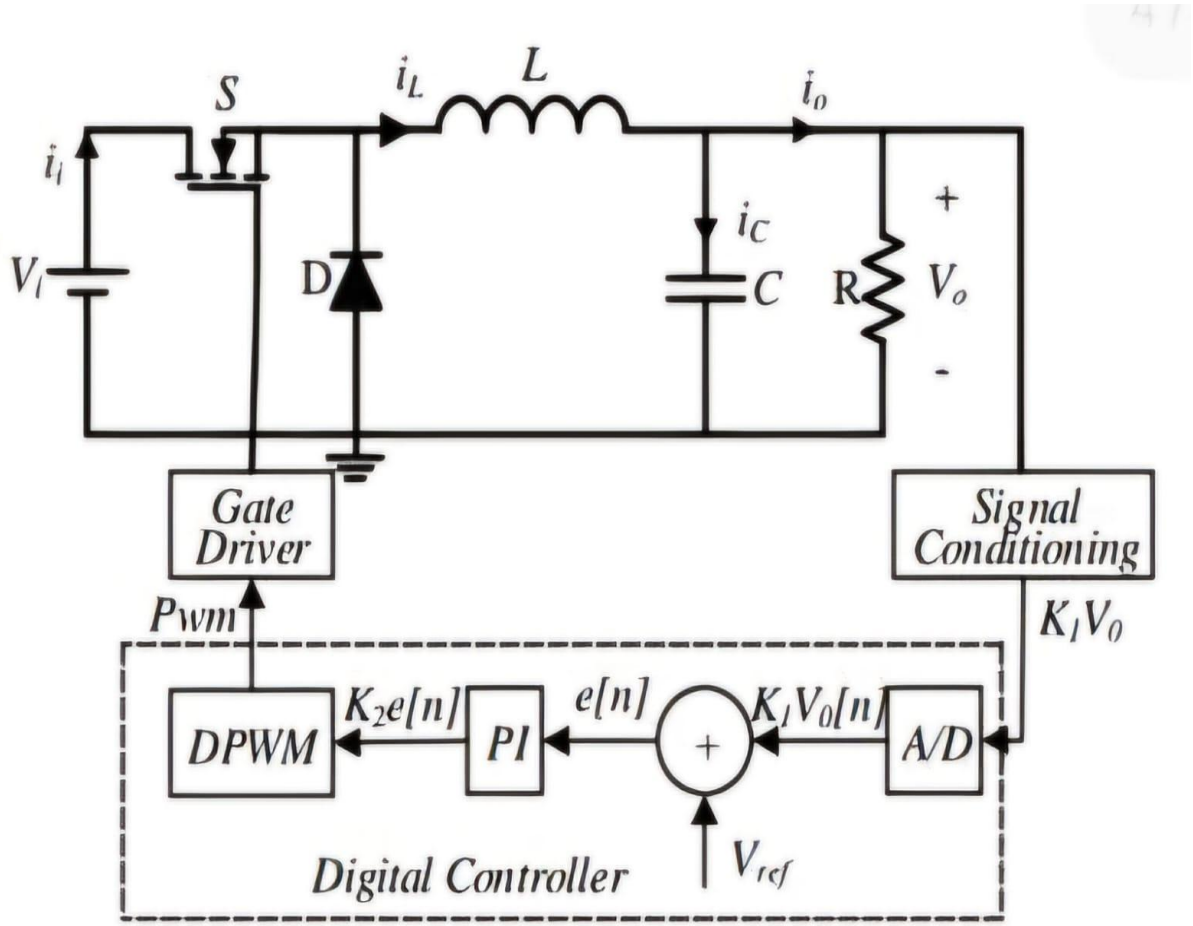

MATLAB SIMULATION

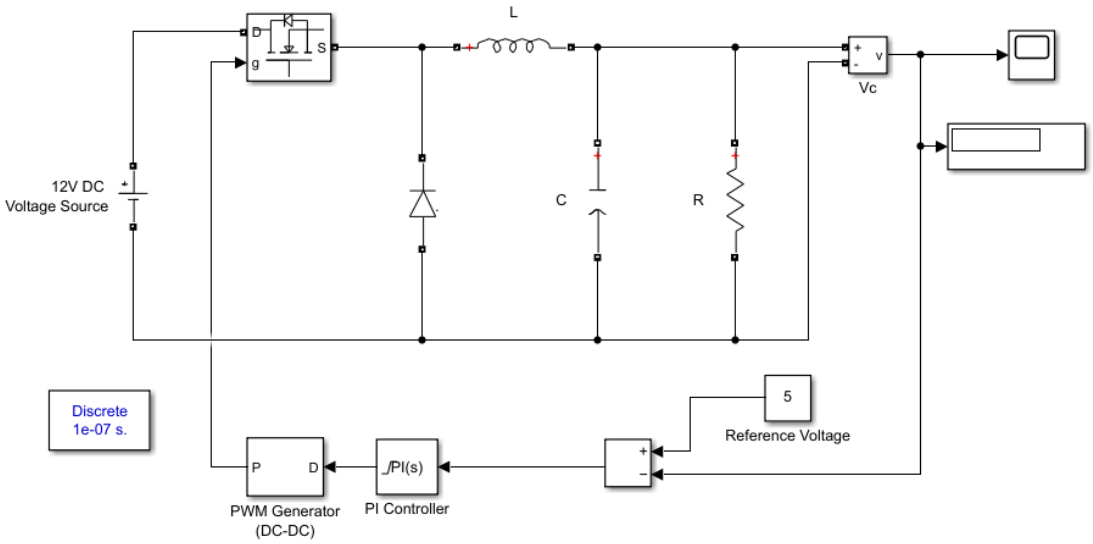

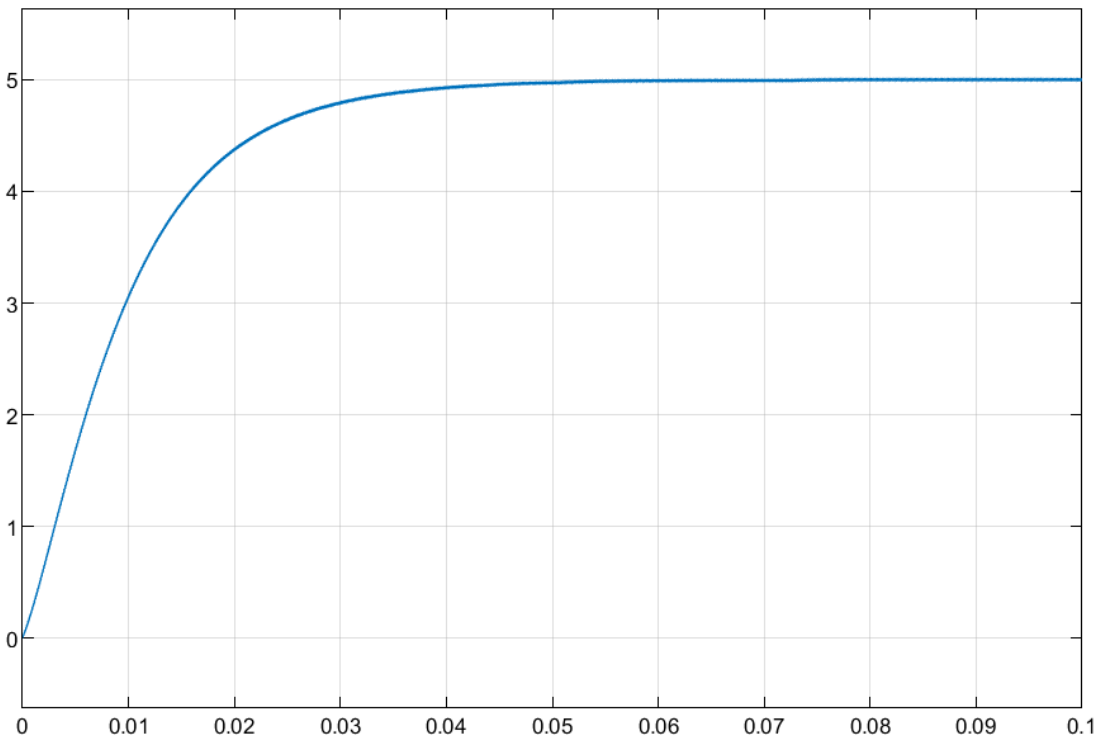

CODE

```
#define FB A0
#define PWM 9

        // PID Gains (Adjusted for Stability)
float Kp = 0.3;  // Increase proportional gain for better response
float Ki = 0.5;  // Reduce integral gain to avoid windup
        float errors = 0;
int dutyCycle = 128;  // Start with 50% duty cycle
        void setup() {
  pinMode(PWM, OUTPUT);
  pinMode(FB, INPUT);
  Serial.begin(9600);

  // Set PWM Frequency for Timer1 (31.25 kHz)
  TCCR1B = TCCR1B & B11111000 | B00000001;
  analogWrite(PWM, dutyCycle);
}
void loop() {
  int sensorValue = analogRead(FB);
 float Vout = (sensorValue /1023.0)*10.0;
          float error = 5.0 - Vout;

  // Deadband to prevent minor fluctuations
  if (abs(error) < 0.05) error = 0;

  // Update integral term but limit its accumulation
  errors = constrain(errors + error, -20, 20);

  // Compute new duty cycle (Tuned Equation)
  dutyCycle = constrain((Kp * error) + (Ki * errors) +128, 10, 255);
  analogWrite(PWM, dutyCycle);

  // Debugging Output
  Serial.print("Vout: ");
  Serial.print(Vout);
  Serial.print(" V  |  Duty Cycle: ");
  Serial.println(dutyCycle);
          delay(200);
}
```

HARDWARE SETUP

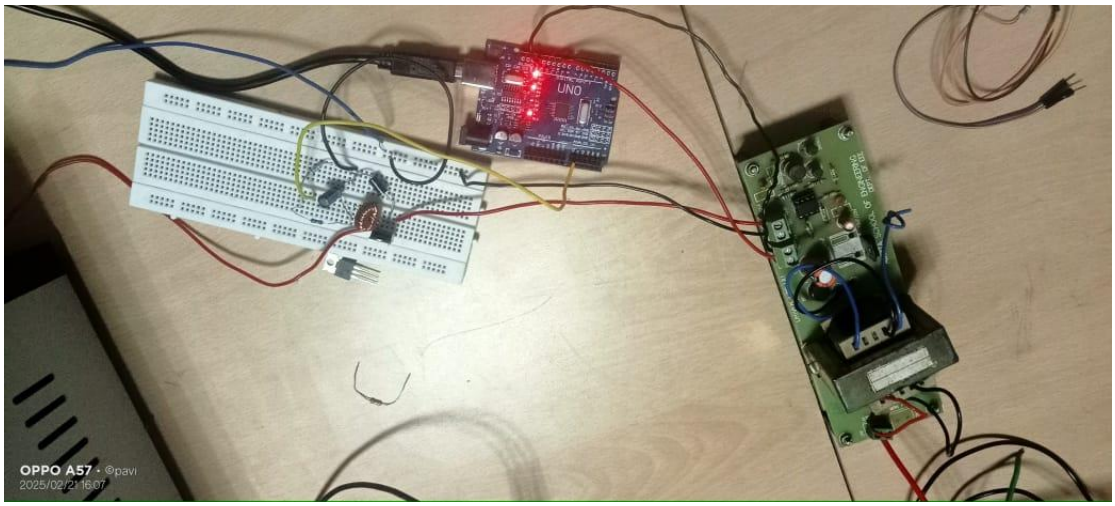

RESULT

The experimental results highlight the advantages of the closed-loop control system:

- Voltage Stability: In the open-loop configuration, output voltage fluctuations were significant due to variable solar input. Once the closed-loop PI controller was engaged, the system maintained a stable 5V output with minimal deviation.
- Response Time: The controller demonstrated a rapid response to transient changes in solar irradiance, effectively adjusting the PWM duty cycle to stabilize the voltage.
- Efficiency: Testing with actual loads (mobile devices) confirmed that the converter could sustain the required 5V output under different current draws, verifying its practical application.
- Data Validation: Measurements taken using a multimeter and logged via the Arduino's serial monitor supported the conclusion that the closed-loop system offers a reliable solution for solar-powered mobile charging.

Overall, the results affirm that the implemented design meets the primary objective of delivering a stable 5V output despite fluctuating input conditions.

CONCLUSIONS & FUTURE WORK

The project successfully demonstrates that a solar-powered buck converter with an Arduino-based closed-loop PI controller can provide a stable and efficient 5V output for USB mobile charging. The integration of a voltage divider for real-time feedback, along with the precise control of the MOSFET through a dedicated gate driver, ensures that fluctuations in solar input are effectively mitigated. This design is not only cost-effective but also environmentally sustainable, making it a viable solution for off-grid and renewable energy applications.

Future Work: -

- MPPT Integration: Implementing a Maximum Power Point Tracking (MPPT) algorithm to maximize energy extraction from the solar panel.
- Advanced Filtering: Incorporating additional filtering circuits to reduce high-frequency noise and further improve output quality.
- Miniaturization: Designing a more compact and rugged version of the converter for portable applications.
- Extended Testing: Conducting long-term reliability tests under diverse environmental conditions to validate the design's performance over time.
- Alternate Control Strategies: Exploring other control algorithms and switching devices to potentially enhance efficiency and reduce component costs.

REFERENCES

[1] H. Sucu, T. Goktas, and M. Arkan, "Design, Simulation and Application of Buck Converter with Digital PI Controller," Balkan Journal of Electrical and Computer Engineering, vol. 9, no. 2, pp. 106–113, Apr. 2021, doi: 10.17694/bajece.884290.

[2] S. Kiruthiga, M. Dheivanai, S. Deepika, and A. Karuppasamy, "Design of Buck-Boost Converter for Solar Panels using PID Controller," International Journal of Advanced Research in Computer and Communication Engineering, vol. 7, no. 3, pp. 333–339, Mar. 2018.

[3] S. Mageshwari, S. Kanagalakshmi, and H. Rao, "Design and Implementation of Buck-Boost Converter for Residential PV Application," International Journal on Electrical Engineering and Informatics, vol. 9, no. 4, pp. 773–792, Dec. 2017.

[4] "Design and Simulation of Synchronous Buck Converter for Portable Applications," International Journal of Advanced Research in Science, Communication and Technology, vol. 4, no. 6, pp. 1–7, Sep. 2020.

[5] "Design of Battery Charging from Solar Using Buck Converters with MPPT," International Journal of Scientific Research & Engineering Trends, vol. 11, no. 1, pp. 181–185, Jan. 2025.

[6] "Design and Simulation of Buck-Boost Converter Modulation Technique for Solar Applications," International Journal of Advanced Engineering Research and Science, vol. 5, no. 3, pp. 63–68, Mar. 2018.